Topic: Hydrogen Production – Reforming

STEAM REFORMING OF METHANE RICH GAS IN A SOLAR REACTOR

S. Möller, R. Buck, R. Tamme,

Address: DLR – German Aerospace Center, Pfaffenwaldring 38-40

Postal code: 70437, city: Stuttgart, Country: Germany

Phone: +49 (711) 6862 640, Fax: +49 (711) 6862 747

e-mail: stephan.moeller@dlr.de

M. Epstein, D. Liebermann, M. Meri,

Address: The Weizmann Institute of Science (WIS), POB 26, Rehovot 76100, Israel

Keywords: Hydrogen, Synthesis gas, Steam Reforming, Concentrated Solar Thermal

Abstract

A common route for hydrogen production is steam reforming of **n**atural **g**as (NG) or other hydrocarbon materials. Using solar energy, the demand for fossil fuels and therefore CO_2-emissions can be reduced up to 40 % compared with conventional steam reforming processes for producing hydrogen. This paper presents recent achievements on innovative solar steam reforming technology.

The solar reforming was successfully demonstrated in the SOLASYS project, supported by the European Commission in the JOULE/THERMIE framework. A pilot plant was built in the 3 MW_{th} solar facility at the **W**eizmann **I**nstitute of **S**cience (WIS) in Israel. The reforming process comprises a pressurised **v**olumetric **r**eceiver **r**eactor (VRR) - the reformer. This unit is designed for a maximum gas outlet temperature of about 825°C at 10 bar_a (absolute pressure) and absorbed solar power of about 400 kW_{th}. **Rh**odium (Rh) is used as a catalyst. Because NG is not available on site, **L**iquid **P**etroleum **G**as (LPG) is used as a feedstock. This leads to additional system components such as evaporator, gas treatment, purifier, and pre-reformer which produce a feed gas containing primarily methane.

Results of solar reforming tests at a solar power range of 100-220 kW, which is absorbed by the gas mixture, are presented. Synthesis gas was produced from a methane rich gas originated from the LPG and steam up to 9 bar_a and 765°C with a conversion rate close to chemical equilibrium.

Introduction

The mayor use of Hydrogen in the future is expected to be used in the energy sector, because hydrogen is flexible, affordable, safe, can be transmitted over long distances in conventional piping network and can be used in a variety of applications. However its use makes sense only when Hydrogen is produced with less or without Net-CO_2-emissions. Today, Hydrogen is primarily produced from NG using well-known commercial thermal processes like steam re-

forming. These processes have high CO_2-emissions. Zero Net emissions one can achieve when the feedstock is from a renewable source like bio-gas. Examples for Hydrogen production methods without CO_2-emissions are water electrolysis with renewable electricity [1] or thermo-chemical cycle processes [2 and 3] using renewable heat. The use of nuclear heat is not reasonable because of its socio-economic problems world-wide. However, Hydrogen costs from renewable processes are currently economical prohibitive. Therefore, a transition to a Hydrogen economy would most likely begin with Hydrogen produced from fossil fuels, particularly NG and coal. But parallel, the conventional Hydrogen must be substituted gradually by renewable Hydrogen. A process which combines the benefit of conventional systems with renewable technique is the solar steam reforming.

The Solar Steam Reforming Process

This solar process has the potential to reduce GHG emissions by up to 40 % at competitive cost depending on the comparative process and the use of the product. Steam reforming of NG is a well known process in the chemical industry used to generate synthesis gas. Equation 1 represents the main reaction in the reforming process. Followed by shift reaction, equation 2, hydrogen can be separated from the product gas mixture by **p**ressure **s**wing **a**dsorption (PSA).

$$CH_4 + H_2O \leftrightarrow 3\ H_2 + CO \qquad \Delta H = 205\ \text{kJ mol}^{-1} \qquad (1)$$

$$CO + H_2O \leftrightarrow H_2 + CO_2 \qquad \Delta H = -41\ \text{kJ mol}^{-1} \qquad (2)$$

About 30 to 40 % of the fuel, e.g. NG, fed into the reforming process is used to provide the process heat for the highly endothermic reactions. This can be saved by replacing this fraction with solar energy. There are different possibilities to realise this kind of technique. One of them is the allothermal reforming heated by an external heat source like nuclear heat (ADAM and EVA [4]) or solar heat (ASTERIX [5 and 6]). But the solar heated reformer which has the potential of the highest efficiencies and high operation temperatures to achieve high conversion rates of methane is the direct irradiated solar reformer. This solar driven steam reformer was realised and successfully tested in the SOLASYS project (Novel **Sol**ar Assisted Fuel Driven Power **Sys**tem), co-funded by the EC. The studied process comprises solar upgrading of hydrocarbons by steam reforming in a solar reformer, a VRR, and utilising the upgraded hydrogen-rich fuel in a modified gas turbine for electricity generation [7].

Description of the Process Flow

The SOLASYS-plant is the modification of the existing solar reformer pilot plant at the WIS Solar Tower, [8]. Previously operated as a closed loop for CO_2-reforming of methane, it is now modified to an open loop steam reforming system, [9]. Figure 1 shows the schematic of the process flow. Since the preferred NG feedstock is unavailable at WIS, LPG is used as feedstock. The chosen LPG feedstock is low in olefins and with minimum sulphur content. The LPG is stored in a fuel tank and pumped into an electrically heated evaporator. The vaporised fuel is desulphurised at ground level and is then mixed with superheated steam at a nominal molar ratio of 9 parts steam to LPG and piped to the roof of the solar tower. The LPG-steam mix is preheated by reformed product gas to about 400°C, and then it is pre-reformed catalytically to primarily methane and some CO_2 in a pre-reformer at a temperature of about 490°C. Then it enters the solar-heated reformer (nominal operating conditions: 400 kW input of solar heat, 0.12 kg h^{-1} reformer feed mass flow, 825°C exit temperature, 10 bar_a). The reformer product is cooled in five stages to about 60°C, the remaining steam is condensed.

The cold reformed product is piped to ground level where it is compressed into two 9 m^3 storage tanks. The 60 kW Capstone gas turbine receives its fuel from the reformed gas storage, with the option of using LPG directly or a mixture of them.

One of the major topics of the project was to develop, manufacture and test an advanced direct absorption receiver reactor which meets the requirements of the reforming process. The outcome of the development was a VRR as shown in Figure 2 and 3. The receiver is designed to operate at elevated pressures. It can be connected to the gas turbine without additional compressing. The secondary concentrator which is installed in front of the receiver-reactor increases the solar flux density entering the receiver aperture to the required level.

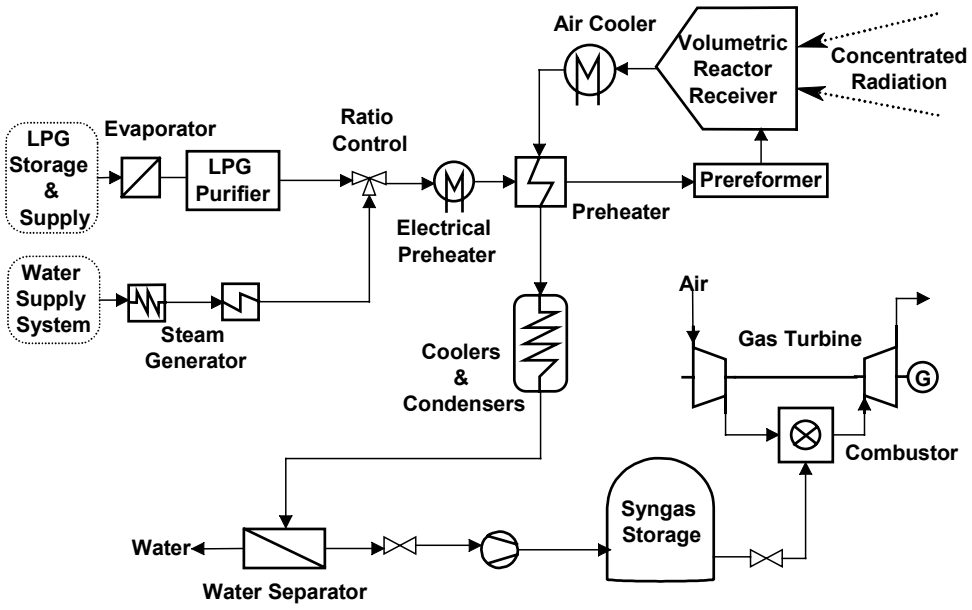

Figure 1 : Schematic of the SOLASYS test plant at the Solar Tower of WIS, Israel.

Description of the Reformer Unit

The reformer unit comprises the secondary concentrator and the receiver-reformer developed by DLR as can be seen in Figure 2. The secondary concentrator which is installed in front of the reformer, increases the solar flux density in the reformer aperture to the required level. The reformer is a pressurised vessel. The aperture is covered by a domed quartz window which offers good pressure stability as well as reduced reflection losses. The radiation transmitted through the window is absorbed on the volumetric absorber with a concave geometry. Therewith the porous absorber is directly illuminated by the solar radiation and reaches a high temperature level. At this high temperature a mixture of methane and steam passes through the catalyst-coated absorber and reacts to synthesis gas, a mixture of H_2 and CO.The absorber region is separated into inlet section and main absorber section (outlet). The main absorber section is composed of the central disc and 4 rings (see position 0-5 in Figure 2). The ring between section 5 and 6 (see Figure 2 right side) is the inlet section. The absorber is made of highly porous ceramic foam which is coated with a catalyst [10]. Insulation and support structures are made from ceramic fiber materials.

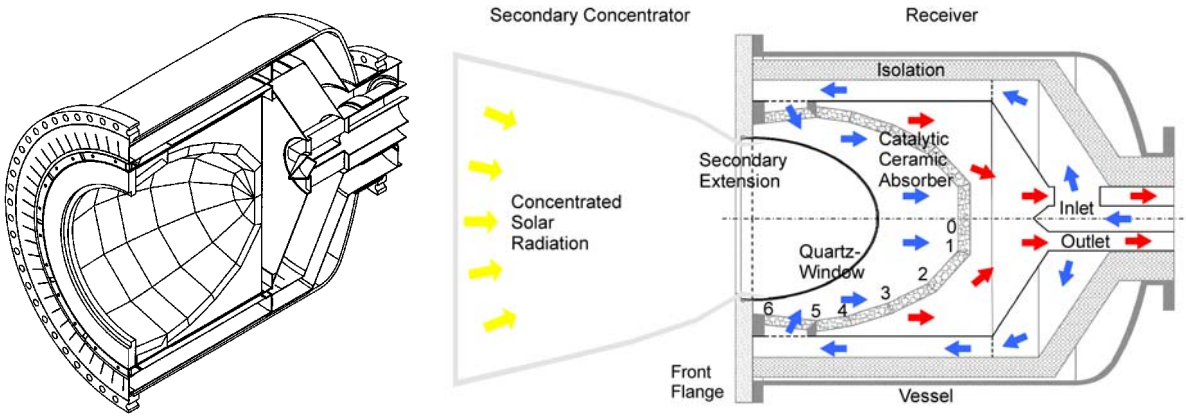

Figure 2 : Schematic drawings of the receiver-reactor.

Heliostat field | Secondary concentrator | Reformer vessel | Gas outlet | Gas inlet

Figure 3: Photo from the reformer unit, side view.

Catalytically-Active Absorber

The main component of the reformer is the catalytically-active absorber [10]. It has two functions. Firstly it has to absorb the solar radiation and to transfer the heat through the absorber. Secondly it has to effect the reforming process itself. The absorber system is composed of three components: a) the matrix material as structural support, b) the washcoat, which enlarges the surface area and serves as catalyst support, and c) the catalyst itself.

The absorber matrix is made of highly porous ceramic foam consisting of claybonded SiC. According to the experience so far, this material offers a good compromise between material properties and cost. For manufacturing reasons the absorber is built from flat pieces. The absorber rings between the numbers 1 and 6, see schematic on right side in Figure 2, are approximated by 12 trapezoidal pieces each. Together with the center disc this is a total number of 61 absorber pieces. All absorber segments are fixed in a ceramic mounting structure (see Figure 5).

The structure of the ceramic foam have struts that are thick enough to ensure mechanical strength, and they are thin enough to show good heat transfer properties. The absorber seg-

ments are made from SiC ceramic foam of 40 mm thickness, having an open porosity of about 92 % and a pore size of 10 **p**ores **p**er **i**nch (ppi).

To turn the ceramic foam into a catalytic structure a washcoat and a catalyst have been applied to the matrix. The washcoat serves as catalyst support and has to have the following features: a) high microstructure surface area, b) high temperature sintering stability, c) activation of the catalyst, d) adhesion of the washcoat to the ceramic matrix and e) consolidation of the washcoat itself. The washcoat and the catalyst coating had to be developed from the beginning, since the previous supplier was no longer available. A γ- Al_2O_3 with a high temperature stable surface area was selected as washcoat. The washcoat is applied to the ceramic matrix by dip coating. It is based on finely grounded γ-alumina powder, which is suspended in water to give aqueous slurry. To achieve a stable slurry disperging and deflocculating agents are added. The consolidation of the alumina is supported by appropriate binders.

Calcination and sintering treatment led to a high temperature stable coating, having a surface area of about 30 $m^2/g_{support}$ measured by BET[1]. Figure 4 shows a photograph of a part of an absorber segment. One can see the highly porous structure of the foam. The application of the catalyst was done by the wet impregnation technique. An aqueous solution of Rh-nitrate, corresponding to the amount of Rhodium loading of each piece, was sucked up by the washcoat.

The absorber is fixed with a ceramic mounting structure built from fibre-reinforced ceramic plates with a thickness of about 3 mm. The mounting plates are supporting the absorber segments along the axial line of intersection of the segments. The inlet absorber is held in a box-like ceramic structure which also separates the inlet and outlet flow (see Figure 5). The complete absorber with the mounting structures forms a cylindrical unit which is held within a cylindrical metal shell.

Figure 4: Ceramic foam, zoomed.

Figure 5: Catalytically-active Absorber insert before installation in the receiver.

[1] BET surface: defined after Brunnauer, Emmet and Teller

Experimental Results

The solar DLR-reformer was integrated in the WIS-reforming test plant in the year 2001, [11]. In May 2002 the first reforming test phase were performed, [12]. In Figure 3 one can see the reformer unit after the commissioning with LPG/steam. The reformer was successfully operated at the WIS Solar Tower facility, see Figure 6. The heliostat field, see Figure 7, concentrates the sun light onto the reformer unit which is installed on the roof of the WIS Solar Tower. In Figure 8 the irradiated receiver with the secondary concentrator is shown. The photo was taken from the heliostat field with special glasses and a zoom lens. One can see the reflection of the mirrors and of the domed quartz window. The secondary concentrator is surrounded by a reflection shield.

Figure 6: Solar reforming test plant in operation;
location: Solar Tower facility at WIS, Israel.

Figure 7: Heliostat field, view from the roof of the WIS Solar Tower Test Facility.

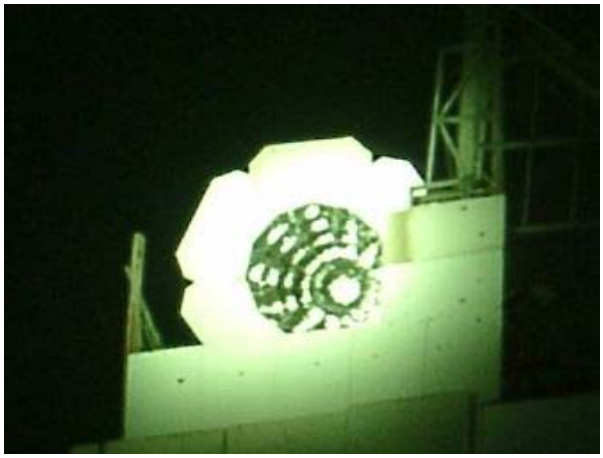

Figure 8: Front view of the irradiated solar reformer unit (view through sun glasses), which is on the roof at the WIS Solar Tower Test Facility.

During the solar reforming test period with the absorbed power range of 100-220 kW, synthesis gas was produced in the reformer at a pressure up to 9 bar_a and between 700° and 765°C with a conversion rate close to chemical equilibrium. About 75 % of the absorbed power was converted and saved as chemical energy. The rest is converted into the sensible heat of the gases. The solar reformer could be operated as theoretically expected. The results for two selected conditions during nearly steady state operation are presented in Table 1. The pressure was varied from 4.9 bar_a to 8.0 bar_a and the process temperature was kept at about 715°C. During these tests, the mass flow of steam / LPG was 100 / 33 kg h^{-1} and 250 / 82 kg h^{-1} respectively. The absorbed power is calculated based on the temperature and molar flow of each component for the inlet and outlet conditions. The total absorbed power of the product gas is the sum of conversion of heat into chemical power and the absorbed sensible power. The CH_4-conversion at approximately 715°C varies between 72 and 61% depending on the pressure. (Note: Increasing the pressure requires increase of the temperature to obtain similar conversion rates.) From the results shown in Table 1 it can be concluded that the solar reforming process results in an increase in calorific value of the product gas mixture compared to the feed gas by 18 % in the case of 72 % methane conversion calculated with the LHV. Therefore about 16 % of the fossil feed fuel can be saved during the electricity generation.

Pressure in reformer	bar_a	4.9	8.0
Temperature of reforming	°C	716	710
Steam mass flow	kg/h	100	250
LPG mass flow	kg/h	33	82
Total absorbed power	kW	100.6 (99.9)	220.3 (211.7)
CH_4-conversion	%	72.0 (73.3)	61.5 (59.0)
Absorbed chemical power	kW	75.4	154.8
Calorific upgrading	%	18.4	14.4
Fuel saving	%	15.6	12.6

Table 1: Experimental results of steam reforming of methane in the VRR;
Values in "( )" are calculated based on theoretical equilibrium composition

Solar Steam Reforming Plant for Hydrogen Production

Using the VRR solar reformer technology for generation of Hydrogen, we expect fuel savings up to 40 % compared to a conventional plant, followed by a water gas shift reactor and gas separation units, see Table 2. Therefore, the CO_2 emissions can be reduced accordingly. The conceptual layout of a solar driven Hydrogen production plant is shown in Figure 9. For the separation of hydrogen and carbon dioxide a PSA unit and gas washer unit using methyldiethanolamine (MDEA) can be considered.

In the reforming plant, see Figure 9, superheated steam is mixed with methane and is preheated in a heat exchanger. The concentrated solar energy is absorbed in the VRR where the reactants are heated up to about 900°C and the reforming takes place. The hot product gases exiting the solar reformer are used for steam generation and preheating of methane/steam mixture needed for the reforming. At about 350°C, the CO component in the product gas is oxidised to CO_2 in an adiabatic water gas shift reactor. The hot hydrogen rich gas mixture is cooled down in heat exchangers to near ambient temperature and the condensed water is separated. The CO_2 and remaining CH_4 are separated from the product Hydrogen in a PSA unit. In this MDEA unit CO_2 is selectively removed from the re-pressurised PSA-off-gas. The rest of the gas containing methane, CO, H_2 (13 % of the H_2 in the shifted product gas mixture) and

CO_2 (5% of CO_2 which is fed in MDEA-unit) is fed back to the process. Purity of hydrogen > 99.95 % and of CO_2 > 95 % can be achieved.

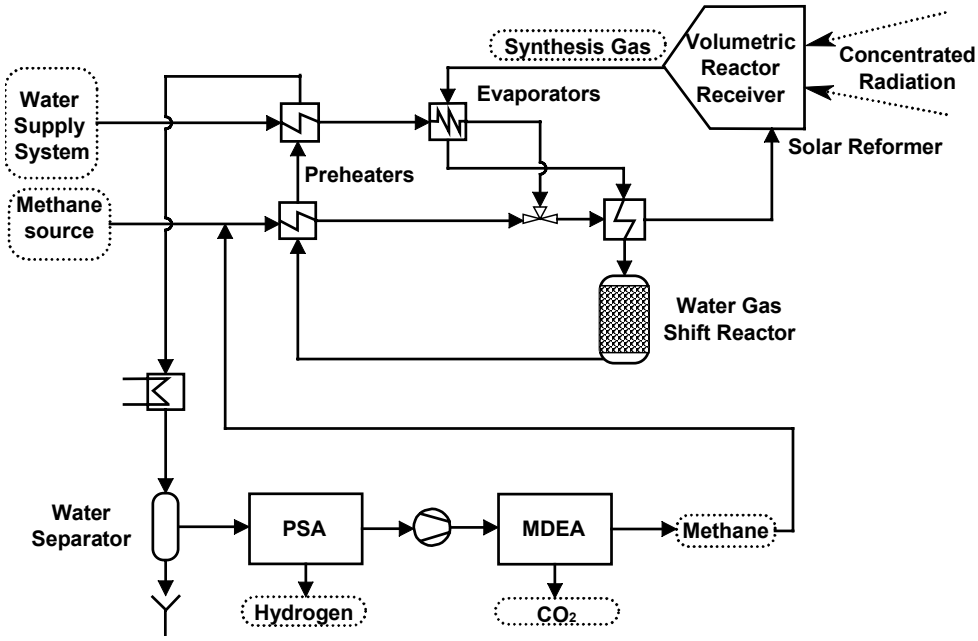

Figure 9: Schematic flow diagram of a solar plant for production of pure hydrogen.

Preliminary cost estimations are presented in [13]. The following assumptions for the conventional route were included in the cost calculations: methane (e.g. NG) cost of 0.2 €/m^3, operation time of the plant of 8000 h/a, and specific investment cost of 350 €/kW$_{hydrogen}$. For the solar path, methane cost of 0.2 €/m^3, a solar tower technology with a SOLASYS reformer and operation time of 2000 h/a, and investment cost of 385 €/kW$_{hydrogen}$ were assumed. The results show that Hydrogen produced by solar reforming costs about 4.7 ct$_€$ / kWh (LHV of H_2). Therefore it is only about 20 % more expensive than the conventional produced Hydrogen. Increasing the cost of methane (NG) will result in favourable conditions for the solar Hydrogen.

	Steam Reforming	
	Conventional	Solar
H_2O/CH_4	3:1	3:1
p in bar	20	20
T in °C	850	850
m^3 CH_4/m^3 H_2	0.42	0.25
kg CO_2/m^3 H_2	0.75	0.45
cost of H_2 in ct$_€$ / kWh (LHV of H_2) (without transport)	3.9	4.7

Table 2: Comparison between conventional and solar steam reforming for Hydrogen production.

A modification of the existing SOLASYS solar reformer is needed, if economic analysis of various plant configurations and operation conditions shows that operation pressure has to be increased beyond the actual design point of the VRR of 10 bar_a. I.e., a PSA unit is normally operated at more than 10 bar_a to reach high recovery of hydrogen and CO_2.

Increasing the operation pressure and holding the operation temperature constant will cause a decrease in the methane conversion level. Additional effort is directed to reduce the water/methane ratio from 3 to 1.5 to increase the total process efficiency. Therefore, higher operating temperature of the VRR to about 1000°C is desired to attain the high conversion level. Moving to alternative gaseous feedstock like biogas and landfill gas, the catalytic system of the VRR must be adapted to the properties of the specific feed source. All these aspects – higher operation temperature and pressure and varying feedstock – require further development of the SOLASYS reformer technology.

Conclusions

The solar steam reforming process using LPG was successfully demonstrated in the EC-supported project, SOLASYS. Fuel savings up to 40 % compared to conventional processes and use of the reforming products are possible. The VRR was operated at a 100 kW power level. At temperatures up to 765°C and pressures up to 9 bar_a the conversion of methane has reached 78 % close to chemical equilibrium. The cost study shows, that hydrogen can be produced at below 5 $ct_€/kWh_{LHV\ of\ Hydrogen}$ by solar steam reforming using NG. This is only about 20 % more expansive than produced conventionally. The solar driven process reaches profitability when the today's price of NG increases by a factor about two. Therefore, the application of the solar driven reforming process opens the gate to the Hydrogen economy with less GHG emissions at an acceptable price.

Acknowledgement

The work was partially supported by the European Commission, under the DGXII Non-Nuclear Energy Program, Contract No. JOR3-CT98-0300.

References

[1] Steeb H., Aba Oud H. (Eds.): HYSOLAR: German-Saudi Joint Program on Solar Hydrogen Production and Utilisation Phase II 1992-1995; Stuttgart; 1996.

[2] Yalcin S., A review of nuclear hydrogen production, Int. J. Hydrogen Energy, 1989, Vol. 14, No. 8: 551-561.

[3] Steinfeld A., Palumbo R., Solar thermochemical process technology, Meyers R. A. editor, Encyclopedia of physical science technology. New York: Academic Press, ISBN 0-12-227410-5, Vol. 15: 237-256, 2001.

[4] Forschungsanlage GmbH, Jülich, Rheinische Braunkohlewerke, AG Köln, Nukleare Fernenergie, Zusammenfassender Bericht, Jül-Spez-303, March 1985.

[5] Langnickel U., Funken K.-H., Plötz F., Evaluation of solar chemical reactions exemplified by means of the solar steam reforming of methane, Proc of the 6th Int. Symp. on solar thermal concentrating Technologies, Sept 28 - Oct 2, 1992, Vol.II: 969-985.

[6] Böhmer M., Langnickel U., Rodriguez J. A., Sanchez M., Valverde A., Solar steam reforming of methane, Proc of the 6th Int. Symp. on solar thermal concentrating Technologies, Sept 28 - Oct 2, 1992, Vol.II: 987-994.

[7] Tamme R., SOLASYS – Novel Solar Assisted Fuel Driven Power System, contract no. JOR3-CT98-0300, publishable report June 2002.

[8] Abele M., Bauer H., Buck R., Tamme R., Wörner A., Design and Test Results of a Receiver Reactor for Solar Methane Reforming, Solar Engineering 1996: 339-346.

[9] Tamme R., Buck R., Epstein M., Fisher U., Sugarmen C., Solar Upgrading of fuels for Generation of Electricity, J. of Solar Energy Eng. 2001;123: 160-163.

[10] Wörner A., Tamme R., CO_2 reforming of methane in a solar driven volumetric receiver-reactor, Catalysis Today. 1998; 46: 165-174.

[11] Möller S., Buck, R., Tamme R., Epstein M., Liebermann D., Moshe Meri, Fisher U., Rotstein A., Sugarmen C., Solar production of syngas for electricity generation: SOLASYS project test-phase, Proc. of the 11th SolarPACES Int. Symp. on concentrated Solar Power and Chemical Energy Technologies, Zurich, 2002: 231-237.

[12] Tamme R, Buck R., Möller S., Advanced Hydrogen Generation with Concentrated Solar Power Systems, Proceedings of ISEC 2003: International Solar Energy Conference, 16-18 March, 2003, Hawaii.

[13] Kaucic D., Cost comparison of selected processes for the production of solar hydrogen, Studienarbeit, University Flensburg/DLR Stuttgart, 2003.