TRNSYS SOFTWARE APPLICATION FOR SOLAR THERMAL POWER PLANTS SIMULATION AND COMPARATIVE ANALYSIS

OLEG POPEL*[#] , SEMEN FRID*, EVALD SHPILRAIN*, ROBERT PITZ-PAAL AND KLAUS HENNECKE****

*Institute for High Temperatures, Russian Academy of Sciences (IVTAN),
13/19, Izhorskaya str., IVTAN, Moscow 127412, Russia
**Deutsches Zentrum fur Luft- und Raumfahrt e.V., Solare Energietechnik, D-51170 Koln, Germany

Abstract. The TRNSYS is now a widely used by solar community software for evaluation of solar space and water heating and cooling systems. This study, carried out jointly by IVTAN (Russia) and DLR (Germany), was directed on the TRNSYS implementation for different Solar Thermal Power Plant schemes simulation. The main target of the study is to create a common and sound basis for objective analysis of different schemes of solar power plants which have been proposed aplenty during last years in different countries with idea to improve the existing solar power plant concepts. Main attention in the study has been paid to the concept of Hybrid Solar/Fossil Thermal Power Plants (HSFTPP) with modern gas turbines utilization which seems very promising to make solar thermal energy conversion into electricity more economically effective. The hybrid approach gives the opportunity essentially increase the capacity factor and to simplify HSFTPP penetration to the market. Results of three HSFTPP concepts: a Regenerative Brayton Cycle, a Brayton Cycle with Steam Injection into the high pressure gas loop and a Combined Brayton-Rankine Cycle, comparison are discussed in the paper.

1. INTRODUCTION

The TRNSYS software development has been initiated at the University of Madison, WI, USA and due to more than 20 years systematic activity it has become rather powerful and usable computer tool. The TRNSYS and its graphical user interface IISibat permit to use predefined components located in the comprehensive TRNSYS «standard» component libraries or create new own FORTRAN component models with defined input and output interfaces which can be easily connected to assemble different schemes for analysis. Potentially the TRNSYS internal structure, flexibility and graphical interfaces provide wide opportunities for its application not only in original but in many other fields.

This paper describes the authors attempt to apply the TRNSYS capacities to simulate different schemes of Solar Power Plants, that is to apply it for high temperature solar technologies simulation.

Three concepts of solar/fossil power plants have been chosen for this first stage of investigation: a Regenerative Brayton Cycle, a Brayton Cycle with Steam Injection into the high pressure gas loop and a Combined Brayton-Rankine Cycle.

The authors undertook the task to elaborate mathematical models of the above mentioned HSFTPP components according to the TRNSYS rules and using the TRNSYS opportunities to carry out comprehensive analysis and comparison of chosen schemes on a common basis.

The study has been initiated in frame of the International Energy Agency SolarPACES Program and was carried out in 1996–1999 in close collaboration of IVTAN (Russia) and DLR (Germany) research teams with participation ZSW (Germany) and SNL (USA) experts. The study has been supported by INTAS as well as by German Federal Ministry for Science, Education, Research and Technology.

[#] Russian Section of ISES Member. Author to whom correspondence should be addressed. Tel.: +7-095-484-23-74; fax.: +7-095-485-79-36; e-mail: popel@glasnet.ru

2. SCHEMES OF HSFTPP UNDER CONSIDERATION

In the early years of solar thermal power plant development the main target of their design approach was to achieve high solar share with little or no fossil fuel back up requirements (for example SEGS plants in USA). An economic drawback of such systems is the low capacity factor of the power conversion system, which negatively effect on the levelized solar electricity cost. During last years there is growing interest in combining solar thermal technologies with fossil-fuel systems optimized for base or intermediate load operation. The main advantages of such advanced hybrid systems are (Shpilrain et al., 1994, 1996, SolarPACES, 1999):

- reduction of levelized electricity costs from solar by accounting for only the proportional part of power conversion system investment and operation costs,
- increase in the useful operating time of the solar system by reducing the daily start-up and shut-down times due to continuous operation of the power conversion system,
- more profitability and easier market access due to reduced risk for investors and operators.

In this study the following 3 concepts of HSFTPP based on modern gas turbine utilization have been considered:

- a Regenerative Brayton Cycle,
- a Brayton Cycle with Steam Injection into the high pressure gas loop and
- a Combined Brayton-Rankine Cycle.

The advantages of a gas turbine compared with a steam turbine for a Solar Power Plant are obvious:

– with high concentrations available in the tower concept it is easy to obtain working temperatures exceeding 1000°C which are suitable for modern gas turbines. With a steam turbine in a Rankine cycle the working temperature is today limited to some 550°C. It means that in this case high exergy losses will be present;

– the gas turbine does not need a condenser and cooling water which is usual scarce in arid zones most suitable for solar power plant;

– the gas turbine in a solar power plant uses as working media the ambient air, whereas the steam turbine uses water and steam and needs a water treatment installation for the make-up water;

– the gas (air) pressure in the Brayton cycle is usually much less than the steam pressure in the steam turbine. For example in the case of a regenerative cycle the optimum compression ratio is about 4 and it means that air pressure in the installation will not exceed 4 bar, whereas in the steam turbine it may be as high as 100 bar. As a sequence the high pressure components of a steam turbine plant have a rather high inertia prohibiting fast start up and switch off of installation necessary for solar power plant;

– the last but not the least advantage of a solar power plant with a gas turbine is that it can be easy transformed to a solar-fuel power plant (HSFTPP). The needed amount of fuel can be simply injected into the hot air flow without any heat exchange equipment.

The usual objection against a gas turbine power plant is its lower efficiency. But this is true only for a simple Brayton cycle. For a regenerative Brayton cycle as well as for Brayton cycle with steam injection as it will be shown later the efficiencies up to 40-50% can be easily obtained.

A. *Regenerative Brayton Cycle (RBC)*

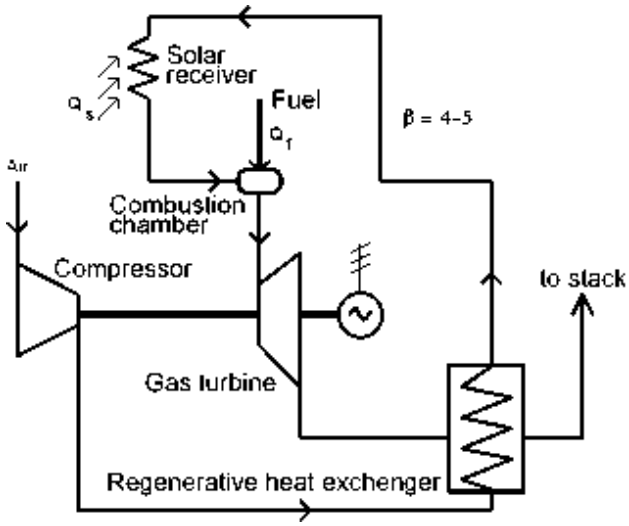

Fig. 1. Schematic of a Solar-Fuel Power Plant with Regenerative Brayton Cycle

In this scheme the exhaust heat is used to preheat the air entering the solar receiver. The exhaust gases flow through a recuperative heat exchanger preheating the air after the compressor before it enters the solar receiver. The principle particularity of this scheme is small pressure ratio in the loop (ß=4–5) providing optimal thermodynamic efficiency of the cycle.

B. Brayton Cycle with Steam Injection (STIG)

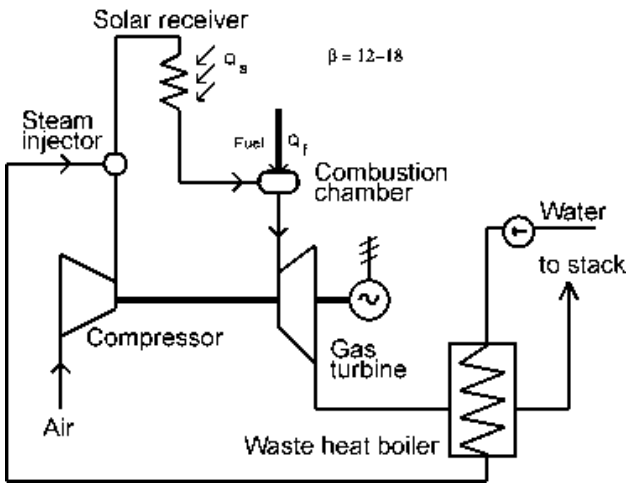

Fig. 2. Schematic of a Solar-Fuel Power Plant with Brayton Cycle and Steam Injection (STIG)

This scheme represents conventional Brayton cycle with high pressure ratio (ß=12–18) and utilization of the exhaust heat to raise steam in a waste heat boiler and inject it into the air flow before the gas turbine (STIG-Brayton cycle).

C. Combined Brayton-Rankine Cycle (CBRC)

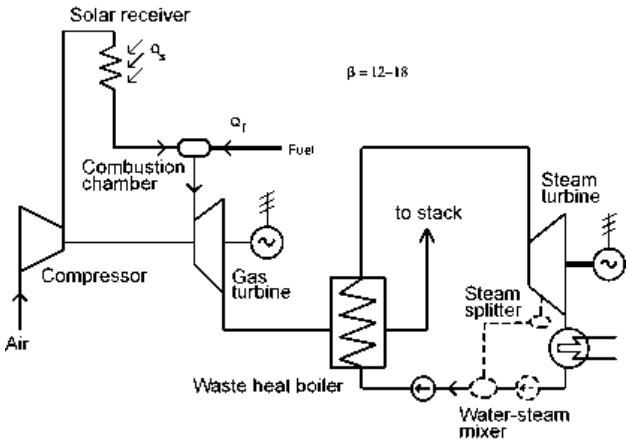

Fig. 3. Schematic of a Solar-Fuel Power Plant with Combined Brayton-Rankine Cycle

This scheme combines Brayton and Rankine cycles. Here the gases exiting the gas turbine having high enough temperature are used in the waste heat boiler to raise steam for the steam turbine.

In all cases the solar part consists of a heliostat field and a tower with a closed volumetric receiver. In the receiver compressed air is heated and then if necessary is heated up by the fossil burner.

3. SOME RESULTS OF THE TRNSYS APPLICATION FOR THE HSFTPP SCHEMES ANALYSIS

The results of the study have been described in details in the SolarPACES Technical Reports (Shpilrain et al., 1998, Pitz-Paal et al., 1998). Only brief summary of the study is presented here to familiarize specialists with main opportunities of the developed approaches.

The main result of the activity is development of 18 new «standard» components for simulation different key elements of solar power plants. So, a new «Solar Thermal Electric Components» (ETEC) branch of the TRNSYS standard component library creation has been started. The new branch includes different modifications of the following components (Fig. 4): air compressor (TYPE 71), gas turbine (TYPE 72), combustion chamber (TYPE 79), solar receiver (TYPE 80), hydraulic loops (TYPES 73, 74), 2 versions of steam generator (TYPES 75, 81), steam injector (TYPE 76), water steam mixer (TYPE 95), feed water pump (TYPE 96), steam turbine (TYPE 97), steam condenser (TYPE 94), steam splitter (TYPE 98) and a set of regulators and controllers (TYPES 77, 78, 93, 99) which provide necessary logic of the considered HSFTPP schemes operation. The library includes also different models of heliostat field and parabolic trough and as a result provides an opportunity to simulate different schemes of solar power plants based on Rankine, Brayton and/or combined thermodynamic cycles. For thermodynamic properties of water and steam simulation the standard STEAM TRNSYS subroutine after some corrections providing its workability for power plant application is used.

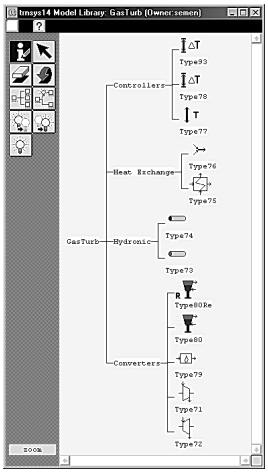

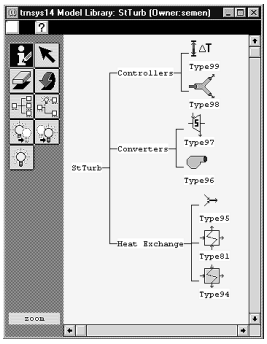

Fig. 4. TRNSYS component libraries for gas and steam turbine loops

Different modifications of the above mentioned HSFTPP schemes have been assembled and accurately tested under the TRNSYS using the components located in the created and standard TRNSYS component libraries. The results of tests carried out under different assumptions, reference (quasi-state) and transient modes of operation have demonstrated workability and vitality of the developed codes as well as the advantages of the chosen approaches for simulation of solar power plants operation and their advanced schemes comparison on a common basis.

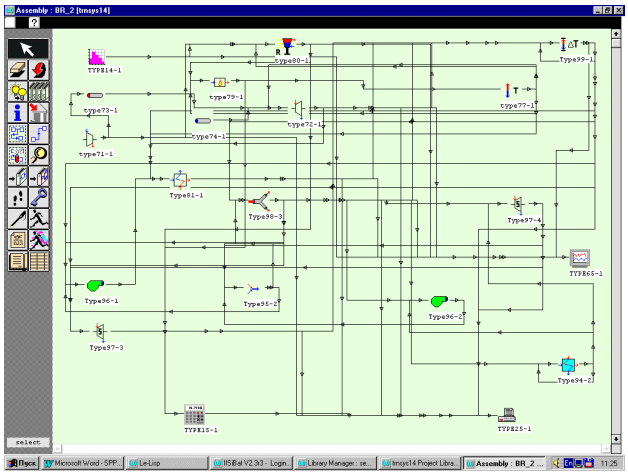

Fig. 5. TRNSYS screen of HSFTPP combined Brayton-Rankine cycle scheme.

Fig. 5 illustrates one of the TRNSYS screens with assembled schemes of considered HSFTPP at different modes of their operation. That is a set of developed and standard TRNSYS components linked together by information transmitting lines connecting outputs and inputs of elements. Such kind of schemes can be assembled directly on the computer screen of the components located in the TRNSYS component libraries.

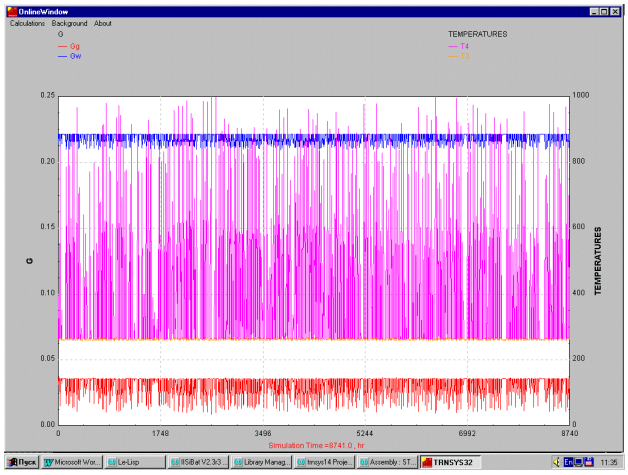

Fig. 6. A view of output data as result of a HSFTPP under TRNSYS.

Fig. 6 demonstrates one of the TRNSYS opportunities of simulation results output. The picture shows one of the HSFTPP schemes operation parameters changing during a year in climatic conditions of Albuquerque taken from the TRNSYS climatic library. The picture is shown only to illustrate unsteady character of parameters variation due to solar radiation and ambient temperature changing during a day and a year. Using of TRNSYS standard means for month and year summation monthly and annual energy balances, including such indicators as solar share and solar fraction, can be easily received as a result of plant simulation.

The ultimate results of the thermodynamic analysis of the schemes under consideration are shown at Fig. 7. Here one can see three sets of curves for each scheme: regenerative Brayton cycle, STIG Brayton cycle and combined Brayton-Rankine cycle. The curves demonstrate the dependence of the cycle efficiency as function of compression ratio in the gas turbine compressor. Each set has as a parameter the gas turbine inlet temperature: 900, 1000 and 1300°C. The influence of this parameter is obvious – the higher is the temperature, the higher is the cycle efficiency.

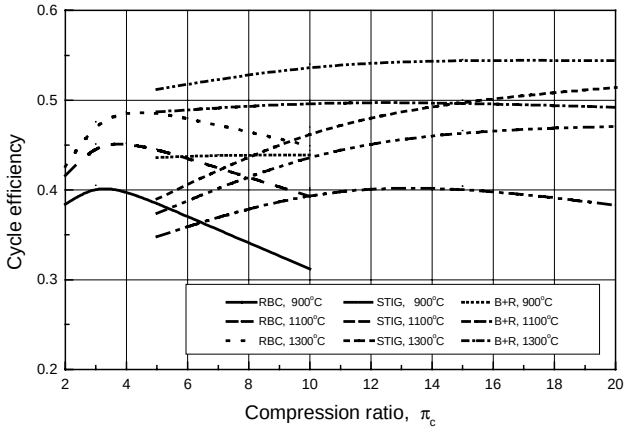

Fig. 7. Comparison of Regenerative Brayton, STIG-Brayton and combined Brayton-Rankine cycle efficiencies.

However the three cycle types have their own peculiarities. First of all the efficiency of the regenerative Brayton cycle has a rather sharp maximum located at compression ratio about 4 to 5. The power plant scheme in this case is quite simple, however the recuperative heat exchanger becomes a substantial piece of equipment which can influence the cost of electricity produced by this plant.

The STIG-Brayton scheme has also the advantage of having only one type of power producing machines – the gas turbine. Instead of the recuperative heat exchanger in the previous scheme here a waste heat boiler is used to recover the heat of the gas turbine combustion products. It can be seen from Fig. 7 that the maximum efficiency of the STIG cycle is almost the same as for the regenerative Brayton cycle, however it is located at higher compression ratio. This last feature might be important since at high compression ratio the work produced by 1 kg of working media is increasing.

The highest efficiencies are obtained for the binary Brayton-Rankine cycle. This type of plant will be more complicated to operate since it includes two different power producing machines – a gas and a steam turbines. The influence of pressure ratio is here not as important. The only exception is the case of gas turbine inlet temperature 900°C. In this case at high pressure ratio the temperature of the gas turbine exhaust is too low to produce in the waste heat boiler steam with necessary parameters.

It is worthwhile to mention that usually to enhance the efficiency of a binary fossil fueled power plant it is necessary to introduce in the steam cycle regenerative preheating of the feed water. As far as by this preheating the feed water enters the waste heat boiler at higher temperatures, it is necessary to cool down the combustion gases in a air preheater. For a solar power plant it is not as simple. Extracting steam for the feed water preheating one decreases the work produced in the steam turbine and therefore decreases the plant efficiency if the amount of heat introduced to the plant remains unchanged. To decrease this heat by preheating air means that the solar fraction will be decreased (since the gas temperature before the gas turbine is defined). However this will contradict the main principle – to have the solar input as high as possible. Therefore we did not include such schemes in our analysis.

4. CONCLUSIONS

Experience accumulated during this study shows that the TRNSYS software is a powerful tool for thermodynamic analysis of different types of solar power plants on a consistent basis. The subroutines developed for specific solar power plants components give the opportunity to combine arbitrary schemes from standard elements and analyze and optimize them according to any kind of assumptions.

The next and extremely important step for research has to be expansion the software for economic calculations.

Specialists from different research centers involved in the mathematical simulation of solar thermal power plants are invited to join efforts directed on acceleration of development and expansion of «Solar Thermal Power Plants» branch of the TRNSYS.

REFERENCES

Shpilrain E.E., Popel O.S.(1994) Analysis of advanced combined solar gas-turbine power plants with regeneration**.** *Proceedings of the 7th International Symposium on Solar Thermal Concen-*

trating Technologies, Vol. 2, pp. 404-418, Moscow, Russia.

Shpilrain E.., Popel O., Frid S., Rheinlander J., Lippke F., Koch H. (1996), Hybrid solar-fuel power plants comparison. *Proceedings of the Seventh Task III Meeting within IEA Solar-PACES on "Solar Technology and Applications"*, pp.195-200, PSA, Almeria, Spain.

SolarPACES Annual Report 1998 (1999), W.Grasse (Ed.), Deutsches Zentrum fur Luft- und Raumfahrt e.V., Koln/Germany.

Shpilrain E., Popel O., Frid S. (1998) *Advanced Solarized Cycles. Hybrid Solar/Fossil Thermal Power Plant Simulation Using the TRNSYS Software* SolarPACES Technical Report No.III–3/98, Deutsches Zentrum fur Luft- und Raumfahrt e.V., Koln/Germany.

Pitz-Paal R., Jones S. (1998) *A TRNSYS Model Library for Solar Thermal Electric Components (STEC)*, SolarPACES Technical Report No.III–4/98, Deutsches Zentrum fur Luft- und Raumfahrt e.V., Koln/Germany.