Integration of particle-based systems in central receiver solar power plants

J. González-Aguilar, M. Romero

IMDEA Energy Institute

Avda. Ramón de la Sagra 3, 28935 Móstoles, Madrid, Spain

jose.gonzalez@imdea.org, manuel.romero@imdea.org

Particles-based Thermal Storage Systems (P-TES) avoid common problems such as freezing or degradation and increase operative temperature limits what allows their coupling with very efficient power cycles (supercritical cycles or combined cycles) or the use of new working fluids (sCO_2 or air), while providing non-expensive and massive storage solution for commercial plants, in central receiver solar power plants.. Thus solar plant flexibility introduced by the use of particles-based storage lead to multiple coupling options, as it is illustrated on Figure 1.

This work will briefly describe various multiple coupling options and will present various analyses on P-TES coupling DSG solar receiver to steam Rankine power cycle and coupling solar air receiver to subcritical & supercritical steam Rankine cycles and sCO_2 Brayton cycle.

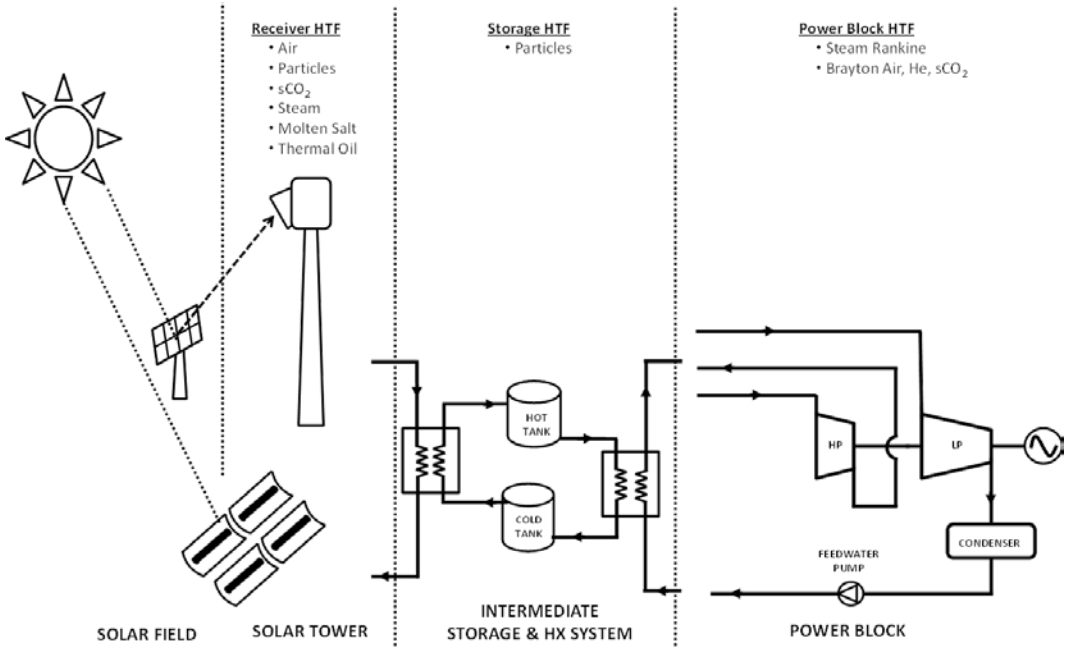

Figure 1. Intermediate energy storage concept using fluidized-bed technology