Discrete Structure Particle Heating Receiver and Related Concentrator Solar Power Research at Georgia Inst of Technology

Faculty: Said Abdel-Khalik, Matt Golob, Clayton Nguyen, and Sheldon Jeter
Graduate Students: Kenzo Repole, Matt Sandlin, Ramy Imam, and Lucy Shen
Georgia Institute of Technology

Hany Al-Ansary and Abdelrahman Elleathy
King Saud University

Abstract

- The Thermal and Solar Energy group at Georgia Tech (GIT) is presently conducting or has recently completed several projects related to or supporting Discrete-Structure Particle Heating Receiver (DS-PHR) technology and related Concentrator Solar Power (CSP) and Concentrator Solar Chemistry (CSChem) technologies. Most of these projects have been performed in collaboration and cooperation with researchers from King Saud University (KSU) and others have involved research in conjunction with Sandia National Laboratory.
- An important KSU-GIT project is the continuing support of the development of the 300 kW-th solar power tower test and demonstration facility at the Riyadh Techno-Valley (RTV) near the KSU campus. Supporting and related projects included studies of:
  - PHR, newer design in process
  - PFHX, moderate pressure operation
  - (small scale) particle lift, Olds Elevator
  - power piping and insulation systems,
  - control and integration,
- heat transfer between surfaces and both rapidly flowing particulate, fluidized particulate beds, and moving packed particle beds;
- particle to fluid heat exchanger (PFHX) design and implementation including the preliminary modeling and optimization of various candidate PFHX designs, for high pressure sc-CO2 and moderate pressure gas turbine systems
- durability of flowing particulates and exposed DS-PHR mesh materials at high temperature;
  - Hour-glass device
  - Particle circulator
- susceptibility of particulates to agglomeration or sintering at high temperature and pressure representative of thermal energy storage (TES) conditions;
  - Commercial very high pressure device at KSU
  - Lower pressure long-duration device at GIT
- efficiency of DS-PHR designs tested at lab scale in the Georgia Tech High Flux Solar Simulator and at larger scale at the Sandia National Solar Thermal Test Facility (NSTTF).
- design, modeling, and optimization of particle lift systems, which has confirmed the feasibility and cost-effectiveness of the insulated skip hoist for PHR applications.
- concentrator solar aspects of CSC systems including the preliminary design and modeling of secondary concentrator and beam-down or beam-redirection systems for these applications.
-

An important KSU-GIT project is the continuing support of the development of the HTSGT project at RTV near the KSU campus. Supporting and related projects included lots of design, CAD, NRE, documentation and studies or selection support of:

- PHR, newer design in process
- PFHX, moderate pressure operation
- (small scale) particle lift, Olds Elevator
- power piping and insulation systems
- control and integration, instrumentation
- TES features, materials, and components

HTSGT Demonstration

- Potential for Collaboration
  - System integration
  - Materials selection
  - Specialized Materials Testing
  - Component Testing

Heat Transfer/HX Research Development Design Demonstration

Moving Packed Bed HTF: A lab scale system is available for preliminary research at near ambient temperature. This system is based on a small Olds elevator.

The particulates are circulated by the Olds elevator and by a “constant heat” device into the heat exchanger test module.

Typical Results: MPB Bare Tube Heat Transfer Coefficient Data

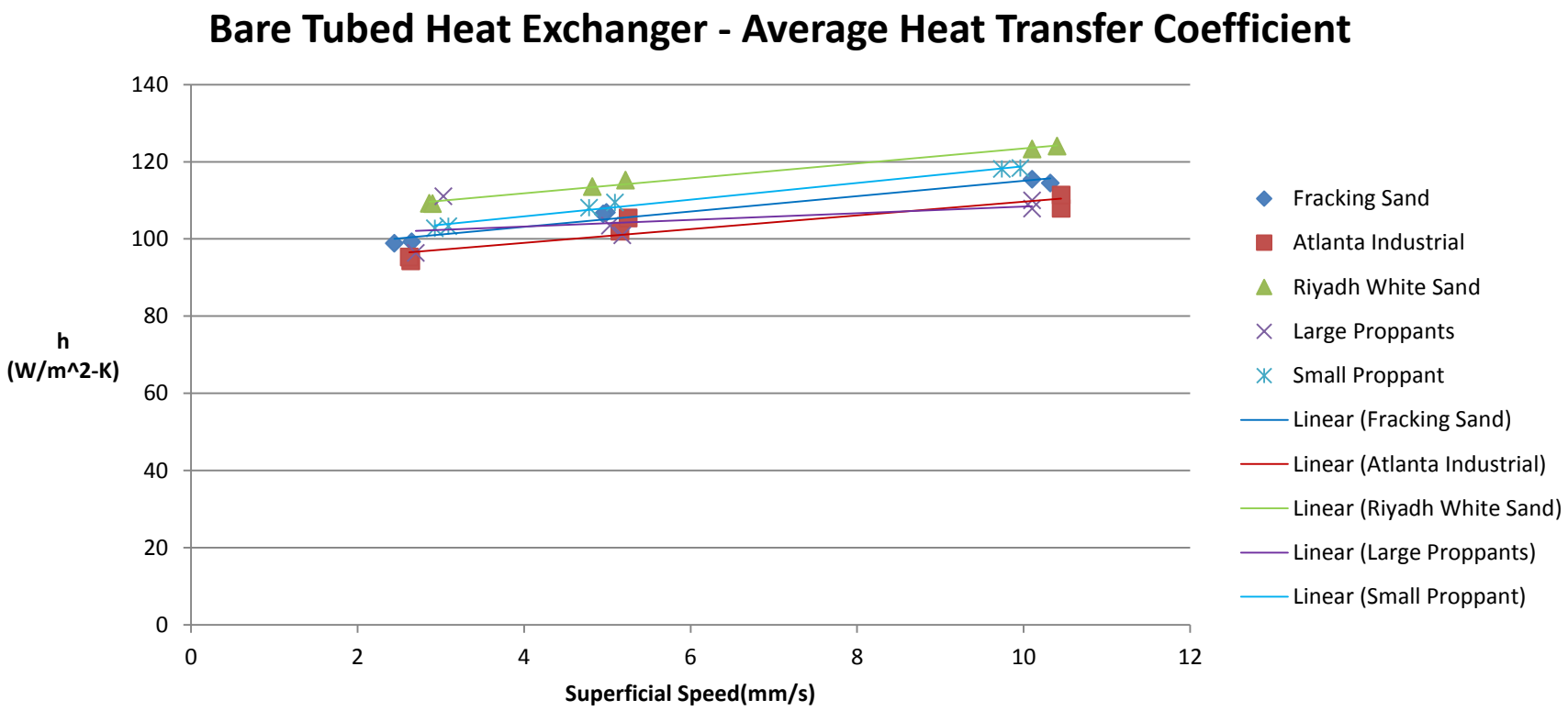

Rapidly Moving Layer with Free Surface: our original HTF interest

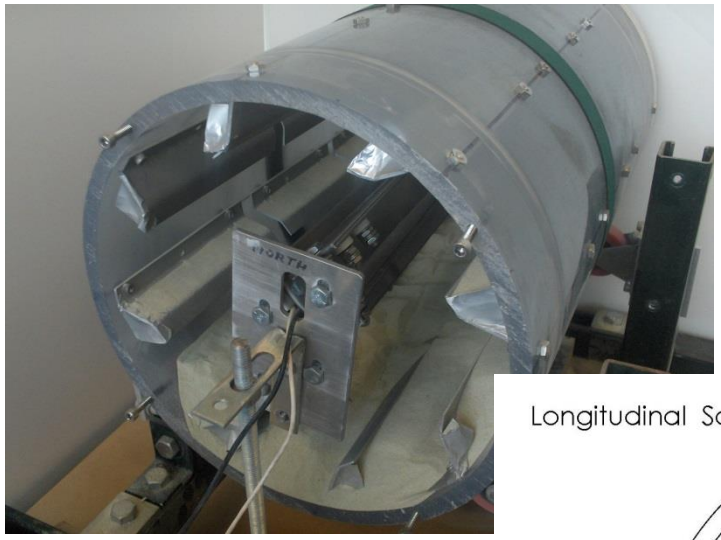

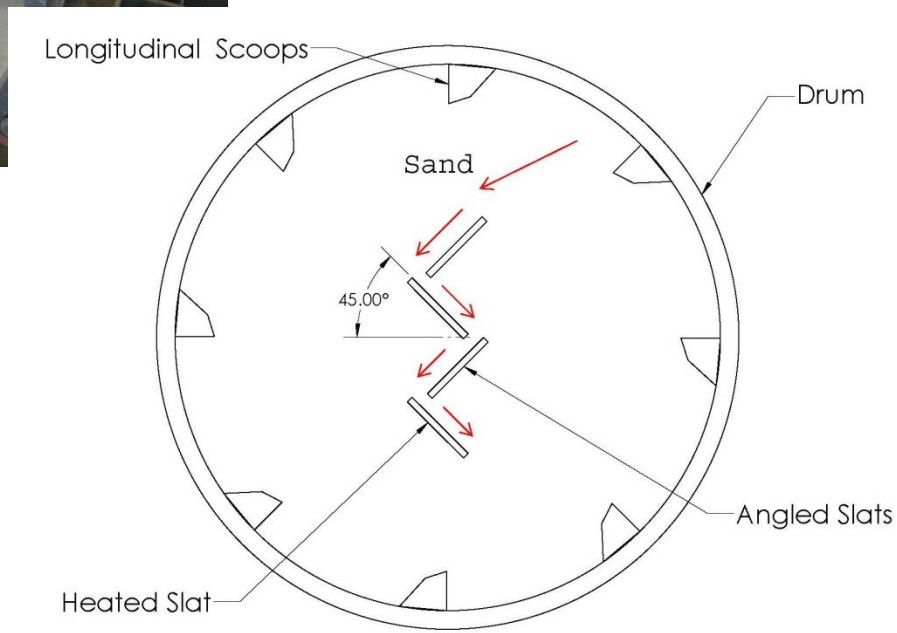

Somewhat dilute

Free surface

High HTC

Fluidized Bed Circulation and Stability

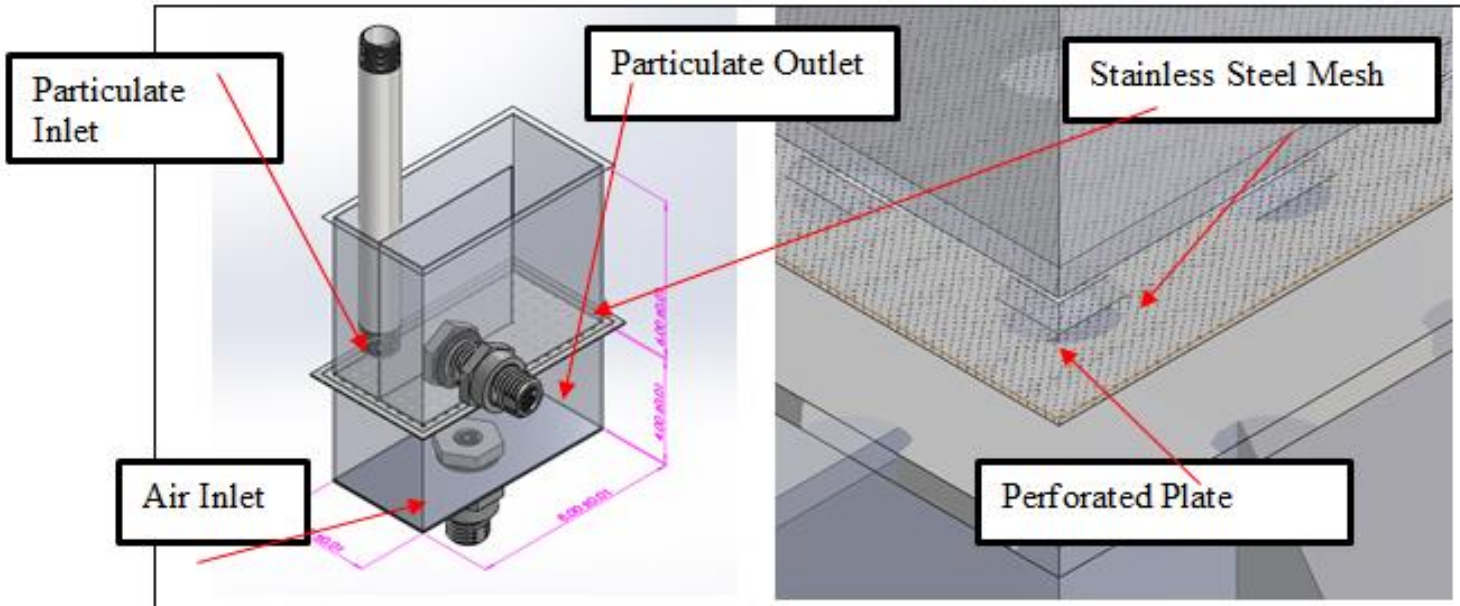

Figure 2. Fluidized bed heat exchanger test article

Left: overall view; Right: detail of sparger assembly

Heat Exchanger Design Analysis and Preliminary Design

Figure 23. Top Left: Serpentine Finned Tube (SFT) HX (most tubes omitted for clarity; Top Right: Fluidized Bed (FB) PFHX; Bottom Left: Zig-Zag (ZZ) trickling flow HX (corrugations exaggerated for clarity); Bottom Right: Parallel Pillow Plate (PP) HX (in section showing plates and multiple orifice flow control grate (MOFCG).

MPB, FB, RFL,
are all still candidates

Are finned surfaces or tubes viable?

Are parasitics (power and heat) of FB tolerable?

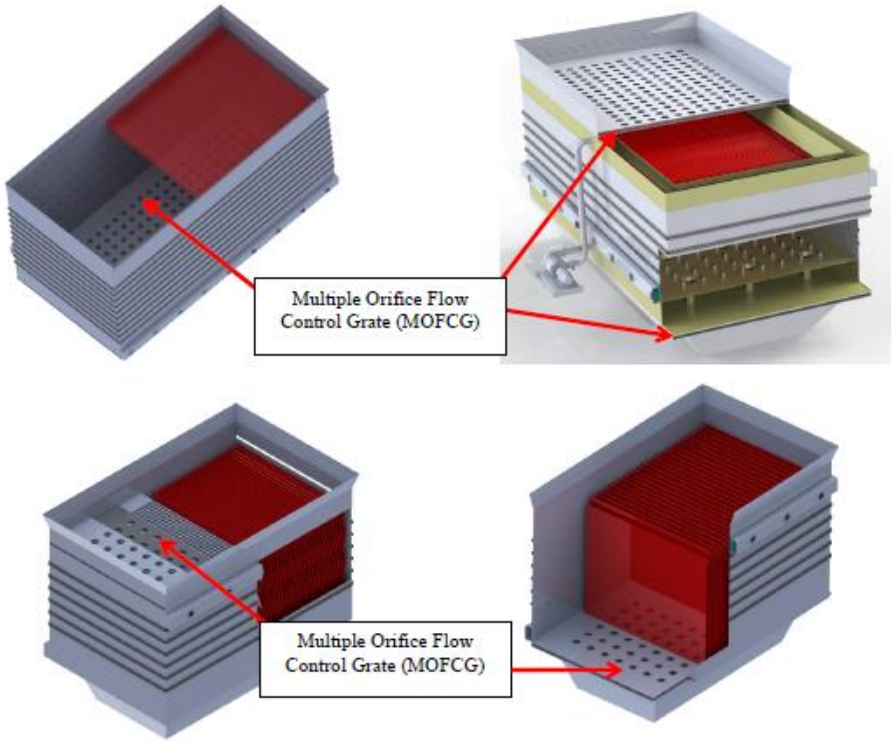

Comparisons: Upgrade, gain consensus, demonstrate

Table 10. Summary of heat exchanger costs and risks for minimum life cycle cost (LCC)

Type	h_{sand} W/m^2-K	Tube mat	Equipment Cost $/kWth	LCC $/kWth	P-Risk	I-Risk	SF-Risk
FB-FT	450	CS/SS	16	33	MOD	MOD	LOW
FB*	600	CS/SS	23	39	HIGH	MOD	LOW
FB**	450	CS/SS	26	46	LOW	MOD	LOW
SFT	101	SS	31	36	MOD	MOD	LOW
ZZHX	400	SS	56	N/A***	HIGH	MOD	MOD
PPHX	100	SS	82	N/A***	LOW	LOW	MOD

FB = fluidized bed, FT = finned tube, SFT = serpentine finned tube, ZZ = zig-zag, PP = pillow plate, HX = heat exchanger

*higher h_{sand} , near max; **conservative h_{sand} ; ***equipment cost too high – LCC not calculated

P-Risk: performance risk, I-Risk: system integration risk, SF: structural failure risk

HTF and HX Development, Modeling, Design, Testing and Demonstration

- Potential for Collaboration
  - All the above
  - Materials selection
  - Specialized Materials Testing
  - Small and mid-scale testing
  - Higher temperature testing
  - Model development

Critical Path: Particle Transportation

Bucket Elevator [1]

Olds Elevator [2]

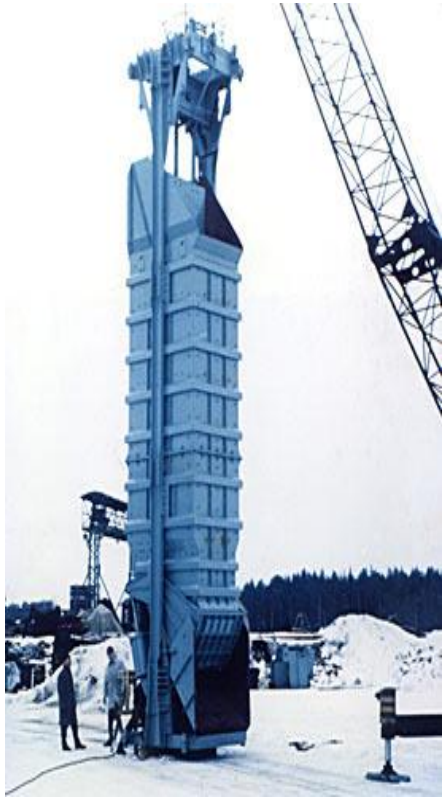

Ore Skip [3]

Images from [1] Advance Tek, [2] Olds Elevator [3] Nyhammars Bruk AB

Olds Elevator Options Implemented at SNL, GIT, KSU-RTV

- A small footprint, high-temperature (600 ˚C) but relatively low efficiency

Particle Lift: Kimberly Skip

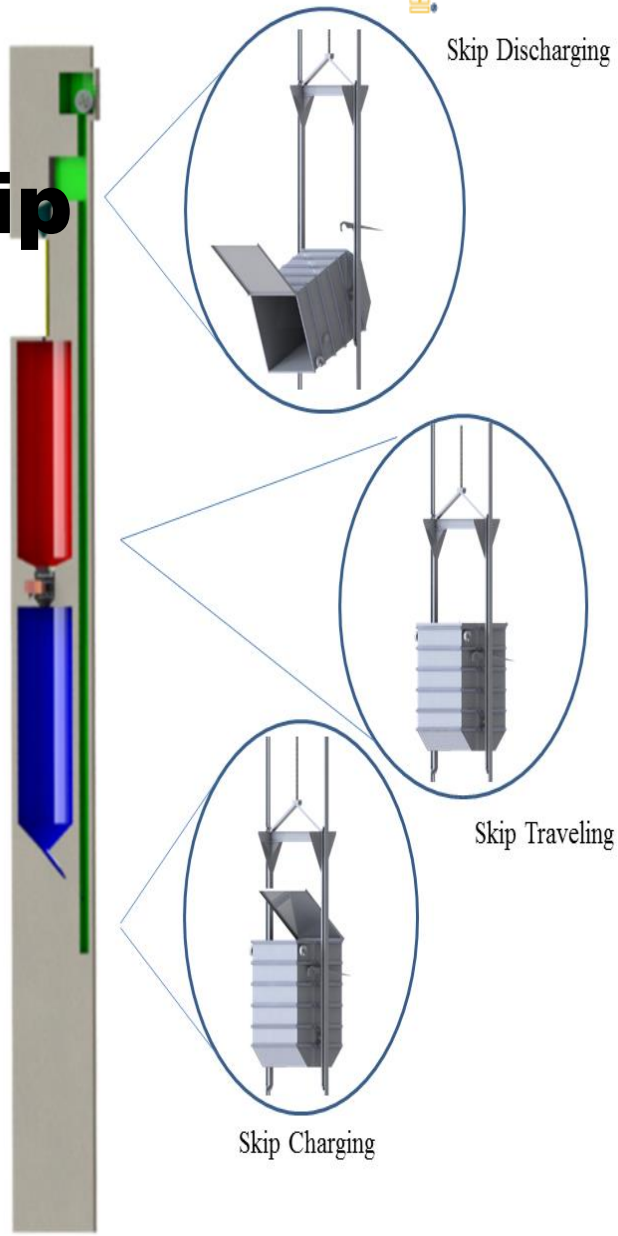

Figure 2

Damage or Adhesion of Particles and mesh structures and materials

Attrition (hour glass)

Agglomeration/Sintering

Figure 3. Image of Experimental Setup

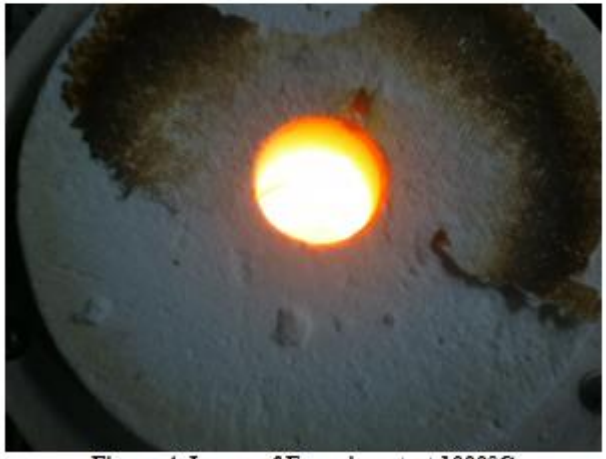

Figure 4. Image of Experiment at 1000°C

Path to Long Term Material and Particulate Testing and Demonstration : The “Sand Circulator”

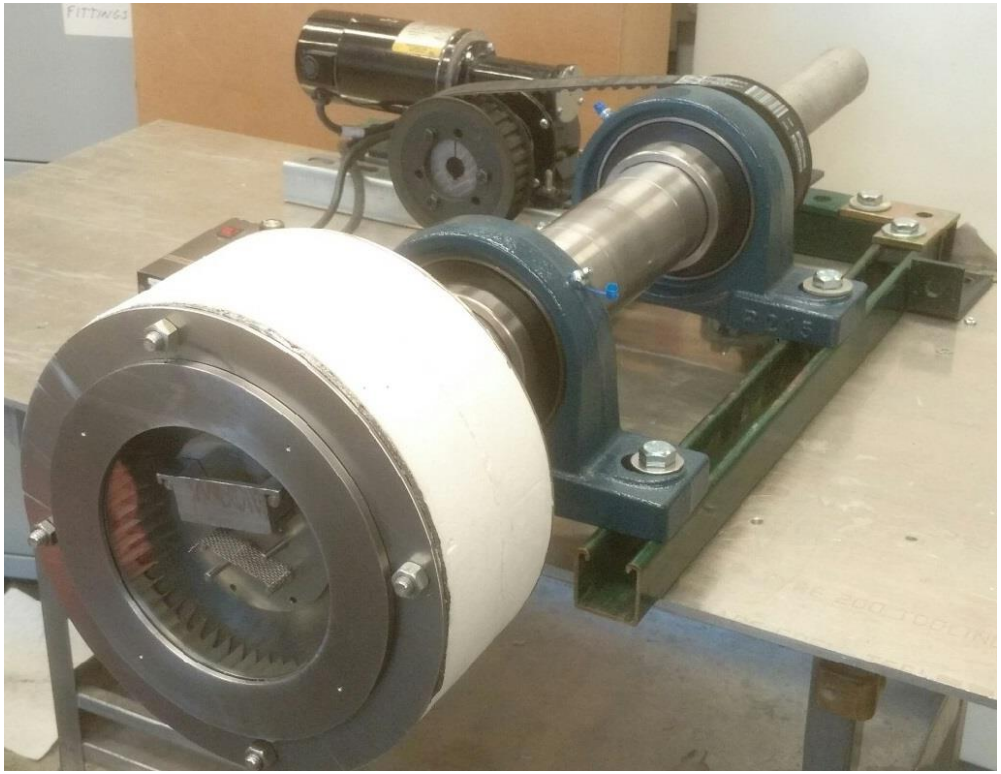

Current design for Sand Circulator mesh durability testing.
This design is for concept testing and low temperature experiments.

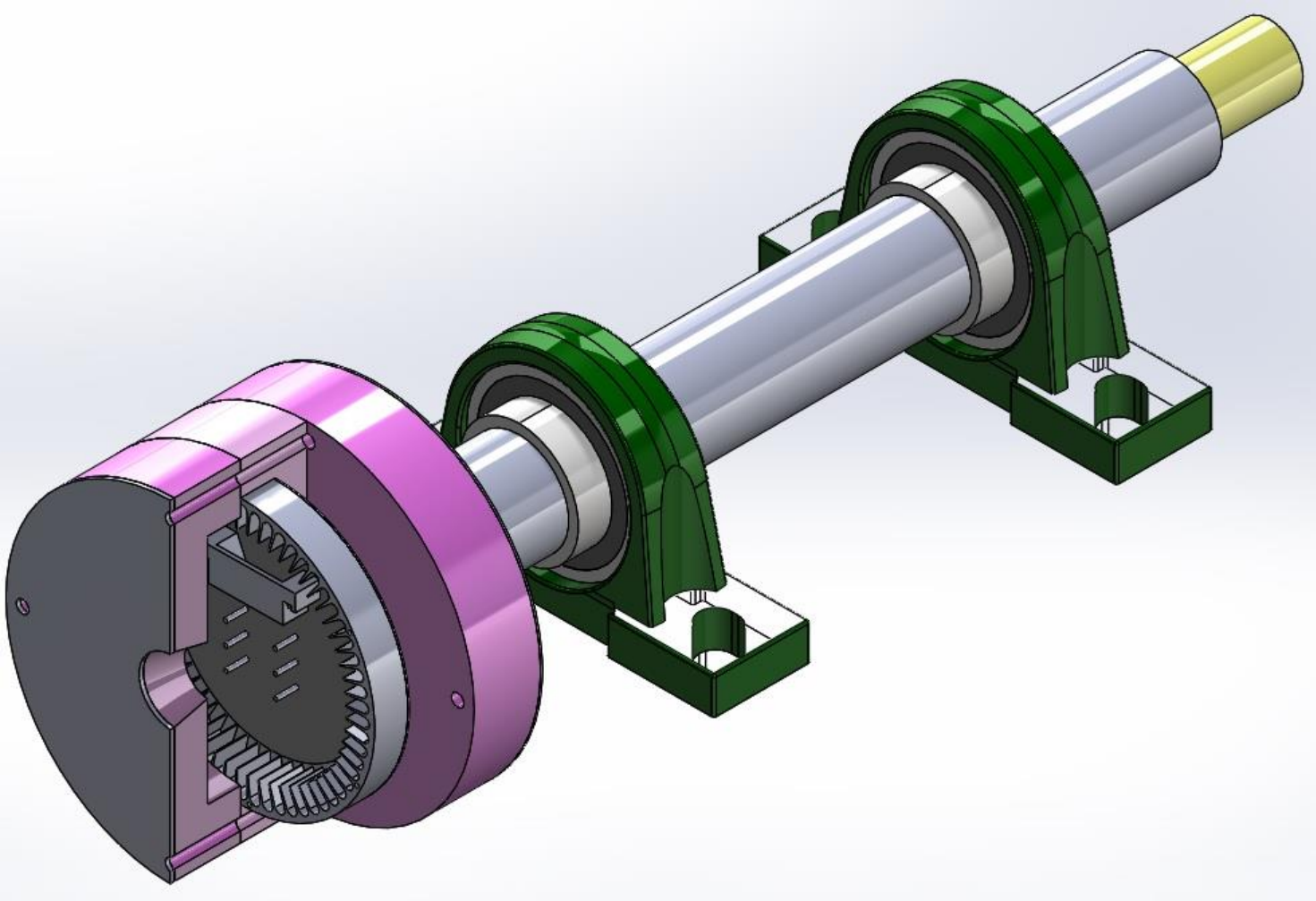

The “sand circulator” when modified for heating
by concentrated radiation through the front aperture.

Initially being used for continuous abrasion testing at room temperature.

350 Watt UHP Lamp with elliptical reflector
will be used as the radiation source
during the high T continuous mesh durability testing.
This lamp should have lifetime of many 1000 hrs.

Testing Viable Materials for TES

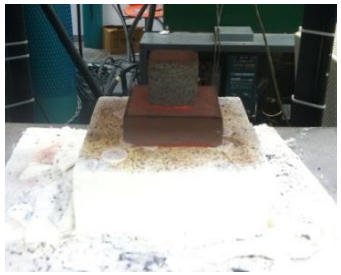

- Portland Cement
- Fire Clay
- Refractory Gel
- Refractory Powder
- Perlite
- Air Entraining Agent

- Cast Brick Samples

- Formulated cement mixes to create samples to test for strength and stability at temperature for prolonged periods
- Also sought to maximize the sample insulation characteristics

Other and Improved Testing Collaboration Opportunities

- Heat Capacity: particulate challenges casual DSC
  - optimize DSC procedures,
  - verify by “drop” calorimeter, “method of mixtures”
  - Always compare with alumina
- High temperature bulk thermal conductivity
  - THW (wire) is problematical
  - TH-probe or TH-disc for contact
- Long time durability at temperature, irradiated

DS-PHR Development, Testing, and Evolution, Testing kW to MW

80 mm to 1.2 m
Issues:
particle Mass Flow
Temperature and Thermal Mixing
Calibration: Calorimetry
Achieving Steady state
Flux Diagnostics

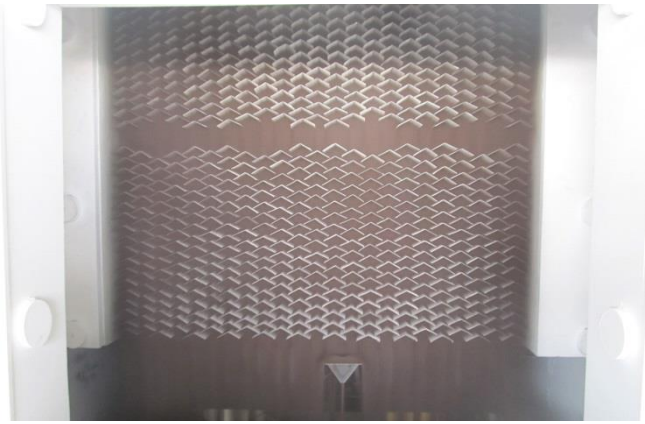

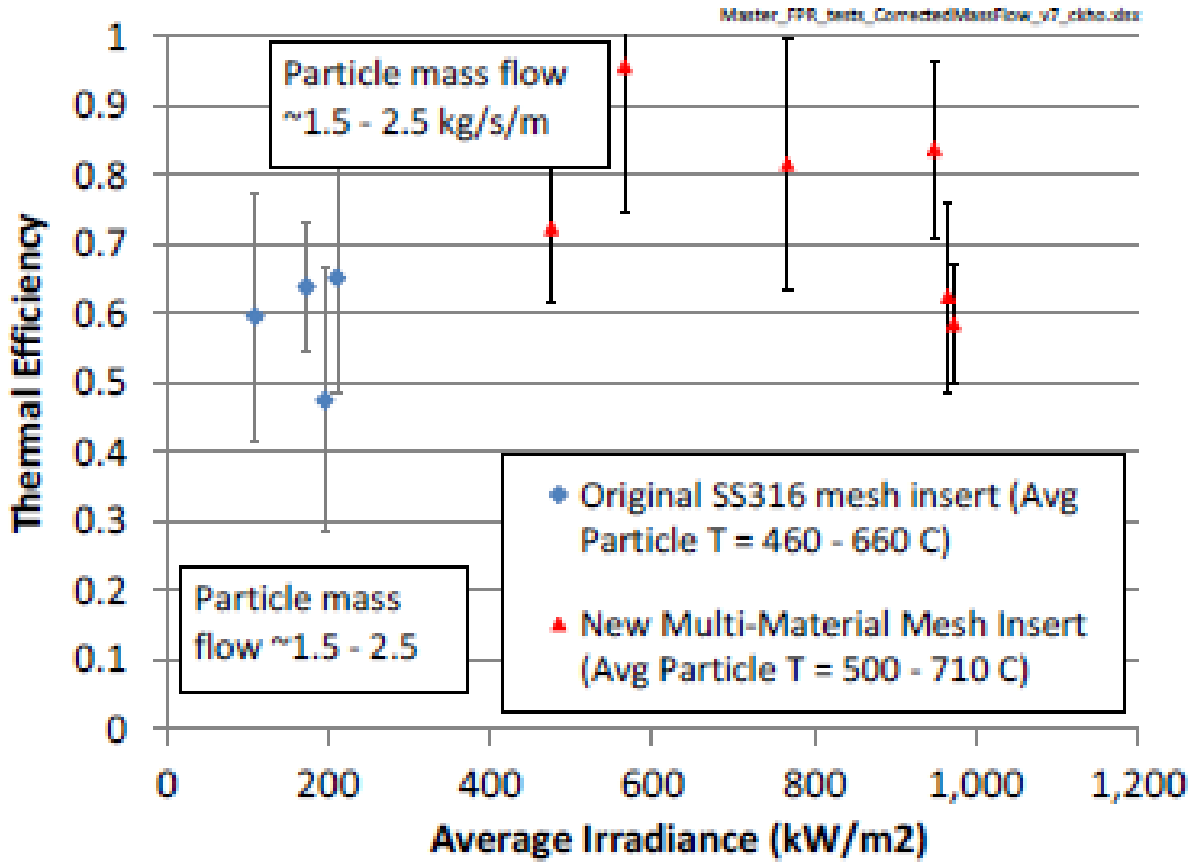
Master_FPR_tests_CorrectedMassFlow_v7_clibo.xlsx
Particle mass flow ~1.5 - 2.5 kg/s/m
Particle mass flow ~1.5 - 2.5
Original SS316 mesh insert (Avg Particle T = 460 - 660 C)
New Multi-Material Mesh Insert (Avg Particle T = 500 - 710 C)
Thermal Efficiency
Average Irradiance (kW/m2)
0
0.1
0.2
0.3
0.4
0.5
0.6
0.7
0.8
0.9
1
0
200
400
600
800
1,000
1,200

GT-HFSS Simulator Systems
Batch Process evolved to Circulator

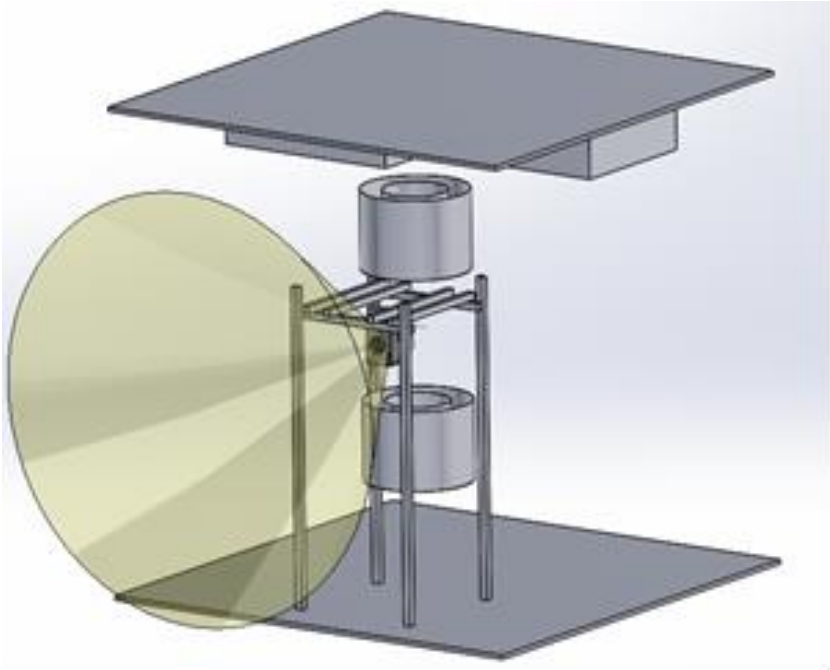

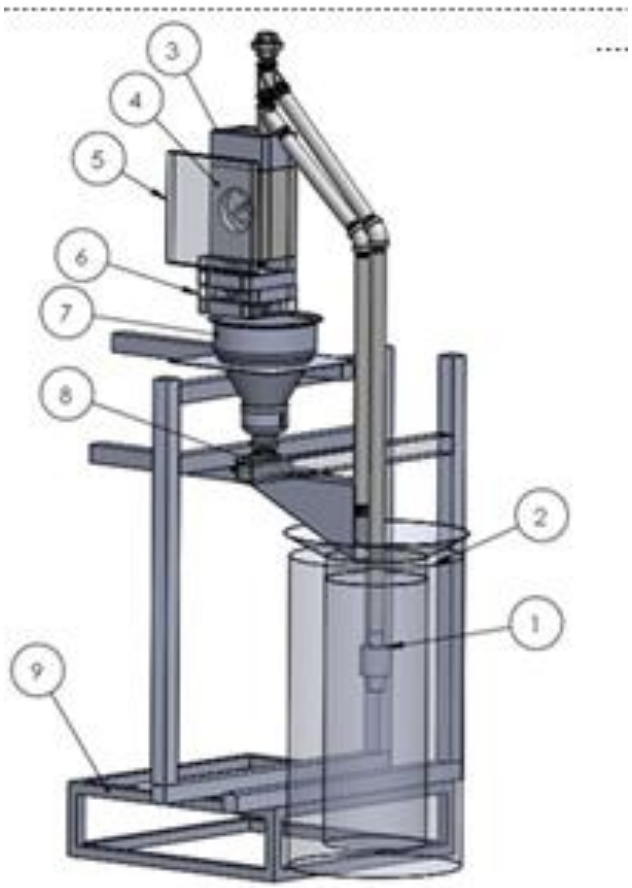

Batch Process not achieving steady state but appears to approach 85% eff

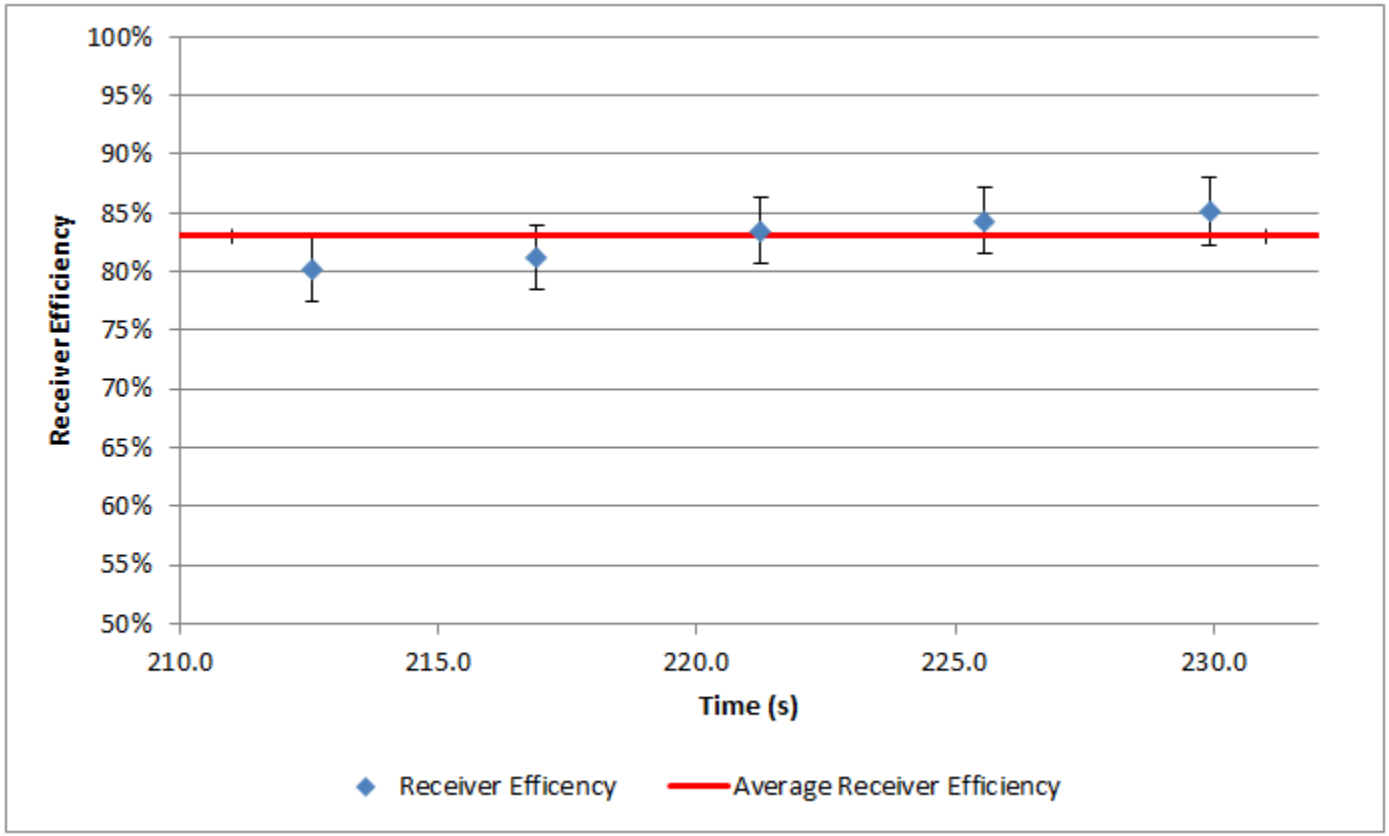

Particle Recirculation

1) Air Conveyor and Air Heat
2) Fluidized Bath
3) Beverloo Box
4) Particle Heating Receiver
5) Lambertian Target
6) Particle Mixer
7) Weighing Reservoir
8) Particulate Valve
9) Scale Base

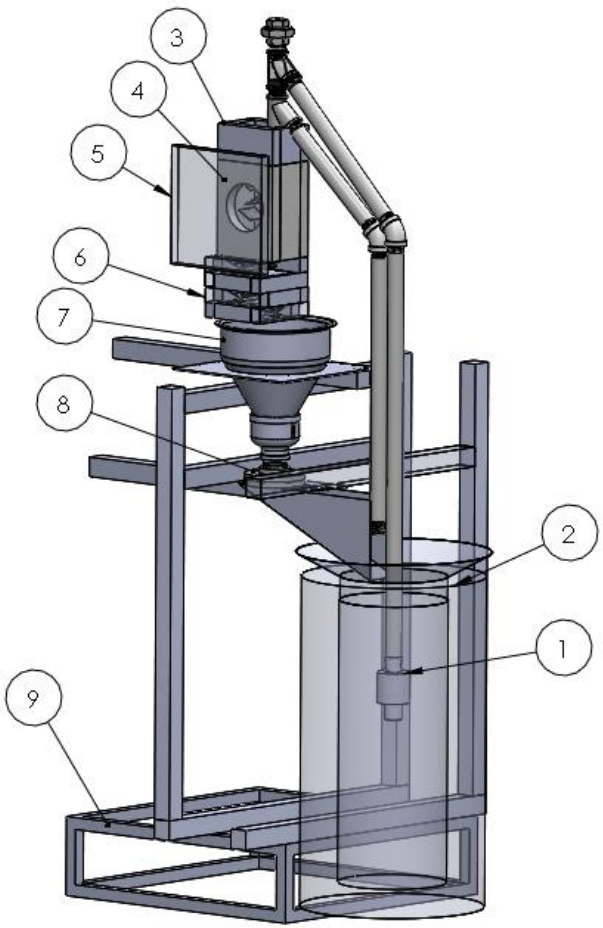

Best Available Empirically Based Model: More HFSS Data with Crculator and Calorimeter Needed

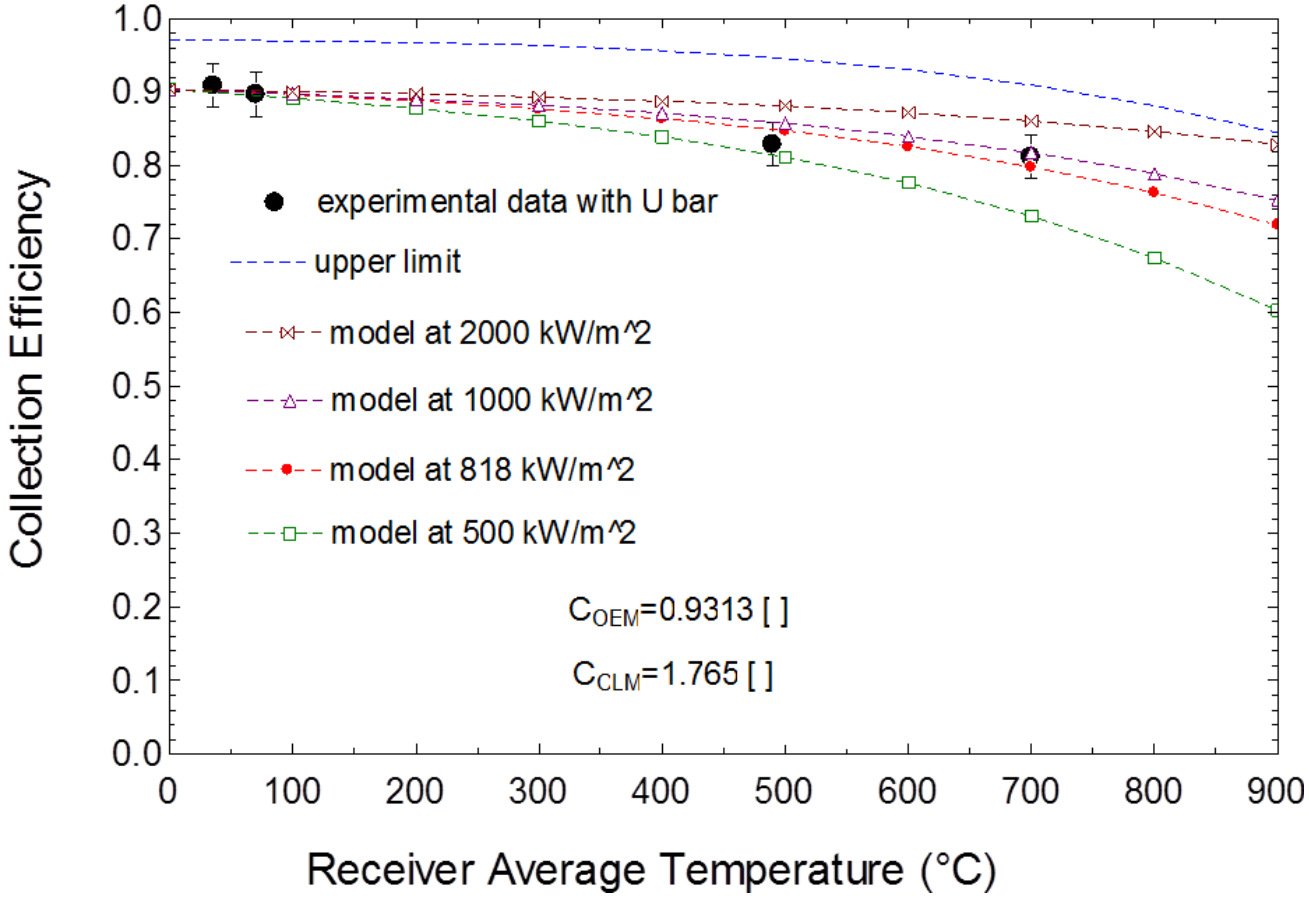

Path to Higher Efficiency

- Absorptive particulate possible
- Higher Receiver Absorption
  - Cavity Receiver
  - Receiver details, develop cavities in the flow
- Higher flux is feasible: direct irradiation
- Control convection
- Enhance Mixing to reduce surface overheat

CS Chemistry and Fuels

- Often particulate processing, similar to PHR
- Ga Tech HFSS – usually busy, we need some time
- New test location at RTV tower roof:

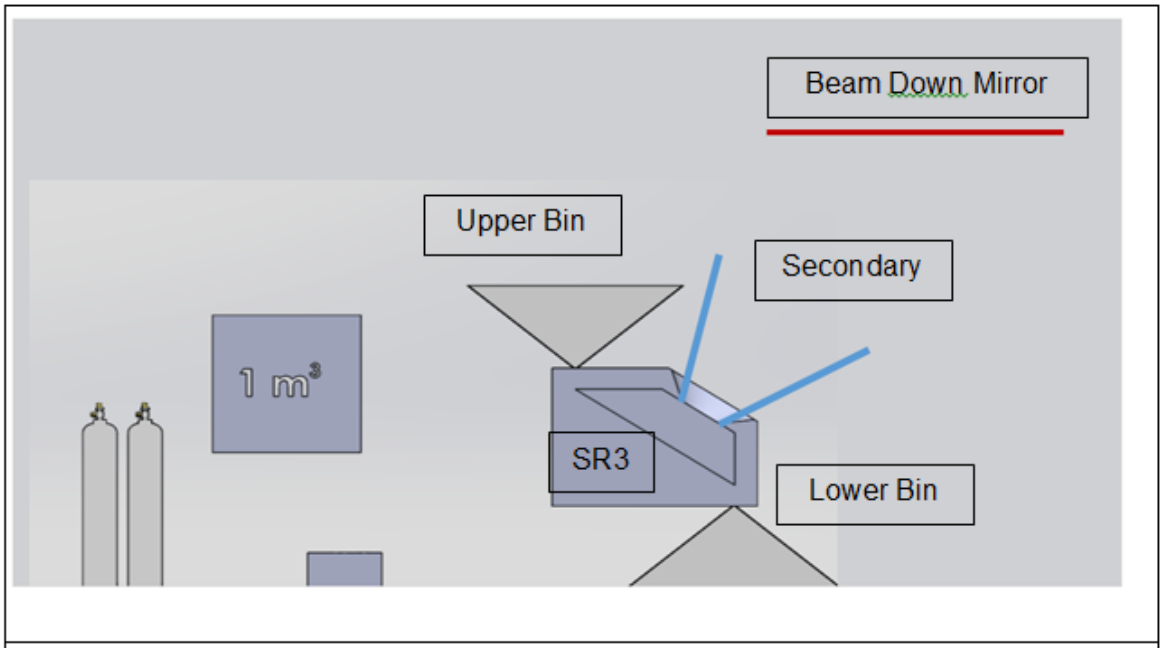

Figure 1. Proposed Beam Down and Secondary Concentrator and other Components

PHR Development and Testing

- Potential for Collaboration
  - RTV site?
  - Solar Furnace at RTV?
  - All Ceramic PHR design
    - Hard to prototype
    - Collaboration necessary
- CSChem and Fuels – similar to PHR
  - Contact: Peter Loutzenhiser

Thanks

- See you at the T100 tomorrow
- Sheldon at sj3@gatech.edu